Block Diagram: Gyro → ESC ECU
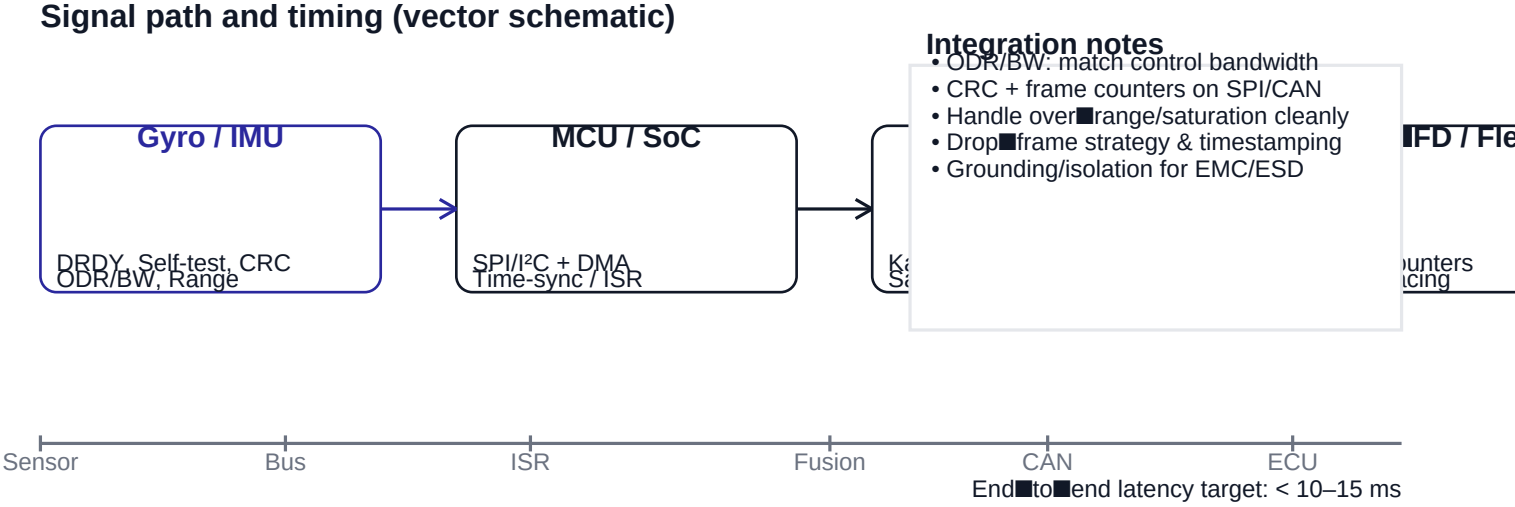
Signal path and timing (vector schematic)